E4-WM5-Y427A00
MOUNTING INSTRUCTION

IMPORTANT!

PLEASE READ ALL INSTRUCTIONS FIRST!

If in doubt, please contact your local BILSTEIN dealer or our sales department before installation.

When replacing other brands, BILSTEIN shock absorbers should always be installed as a set. Installation of shock absorbers, struts and cartridges requires special tools and expert knowledge. Accordingly, installation of all BILSTEIN products must be performed by a qualified suspension specialist.

Always use a chassis hoist for the installation of BILSTEIN products, and make certain that the raised vehicle is securely attached to the hoist to prevent the vehicle from slipping, falling, or moving during the installation process.

If you choose to install any BILSTEIN product without the necessary special tools, expertise or chassis hoist, you may subject yourself to the risk of serious bodily injury or death. If you elect not to use a chassis hoist, at least make sure the vehicle is on level ground, that all tires on the ground during installation are blocked to prevent movement, that at least two tires are on the ground at all times, and that adequately secured safety stands (jack stands) are used to support the chassis. **NEVER** get under the vehicle until you have checked to make sure all of these things are done.

All BILSTEIN products must only be used for the specific, intended application as indicated in the application guide. **Any use of any BILSTEIN product other than for its intended use may result in serious bodily injury or death.**

BILSTEIN suspension products are gas-filled and are highly pressurized. Never place any BILSTEIN product in a vise or use a clamp on any BILSTEIN product; never apply heat near any BILSTEIN product, and never attempt to open or repair any BILSTEIN product, in order to prevent **serious bodily injury or death.** Any attempt to misuse, misapply, modify, or tamper with any BILSTEIN suspension product voids any warranty and **may result in serious bodily injury or death.**

Do not use impact tools for loosening or tightening fasteners, because this may destroy the screw threads. Self-locking nuts must only be used **once**!

Reuse original equipment components only if they are in good condition, otherwise replace them with new components. Never remove the slight film of oil on the piston rod and seal.

All mounting fasteners for shocks and struts must be securely tightened before tension is placed on the suspension system.

After installing any BILSTEIN product, the suspension caster and camber must be checked and/or adjusted to comply with the vehicle manufacturer's specifications. Also, the (load dependent) brake compensator and the anti-lock brake system must be checked and/or reset to comply with the vehicle manufacturer's specifications. Also the headlight aim must be checked and adjusted.

Be sure to properly dispose of all old parts.

E4-WM5-Y427A00
MOUNTING INSTRUCTION

CAUTION!!

Before disassembling the front suspension, refer to the vehicle manufacturer's Service Manual for proper procedures. The coil spring is preloaded and must be compressed with an appropriate spring compressor to release the load before the upper mount is disassembled. Failure to follow the vehicle manufacturer's procedures may cause serious injury or death, and may damage the vehicle.

Instructions for shock absorber removal and installation:

1. Remove the existing front shock absorber assembly from the vehicle following all procedures in the vehicle manufacturer's service manual.
2. Disassemble the upper mount, spring, and jounce bumper from the shock absorber following all procedures in the vehicle manufacturer's service manual.
3. If you would like to increase the vehicle lift height to more than ¾-inch above stock, move the circlip on the new Bilstein shock absorber to the desired ride height location**. Refer to Figure 1 on the following page for circlip positions and resulting lift heights. Use appropriate circlip pliers to move the circlip. Ensure that the circlip is fully seated in the groove after moving it. You should be able to rotate it manually in the groove.
4. Refer to Figure 2 on page 4 for the order in which the shock absorber assembly components should be installed.
5. Install the new Bilstein spring seat onto the new shock absorber as shown in Figure 2. Ensure that the spring seat is not upside-down and that the groove inside the spring seat fits over the circlip on the shock body (see detail view).
6. Slide the new Bilstein washer over the mount stem until it seats against the shoulder on the piston rod.
7. Place the OEM jounce bumper over the piston rod.
8. Re-install the OEM coil spring and OEM upper mount components in reverse order of removal in accordance with the vehicle manufacturer's Service Manual. Use the new Bilstein lock nut to secure the upper mount.
9. Torque the lock nut to 26 N·m (19 lb·ft)
10. Install the complete shock assembly on the vehicle following all procedures in the vehicle manufacturer's service manual.

Figure 1: Circlip positions and resulting lift height

**Please note that the stock ride height position is not an option on this shock absorber.
It is intended for a lifted configuration only.

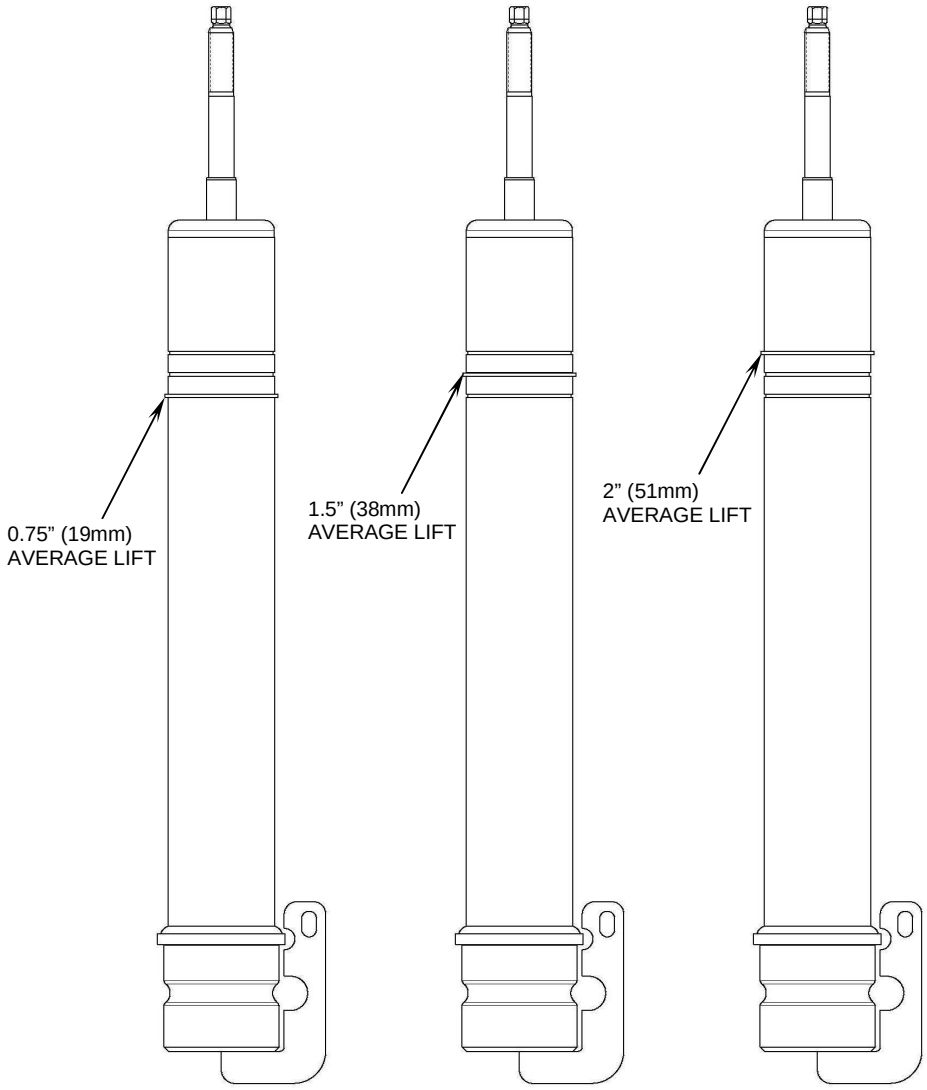

Ride heights indicated are typical. Actual ride height is influenced by which factory suspension the vehicle is equipped with and its condition, optional equipment and accessories on your vehicle, and other vehicle modifications such as replacement coil springs, wheel and tire combinations, etc. Modifying/lifting the suspension to your vehicle may raise its center of gravity and may make it more susceptible to loss of control and/or rollover, which may result in serious injury or death. We strongly recommend that you offset the loss of rollover resistance as much as possible by increasing tire track width, and that you equip the vehicle with a functional roll bar and cage system. Wear seat belts and shoulder harnesses at all times and avoid situations where a side rollover may occur.
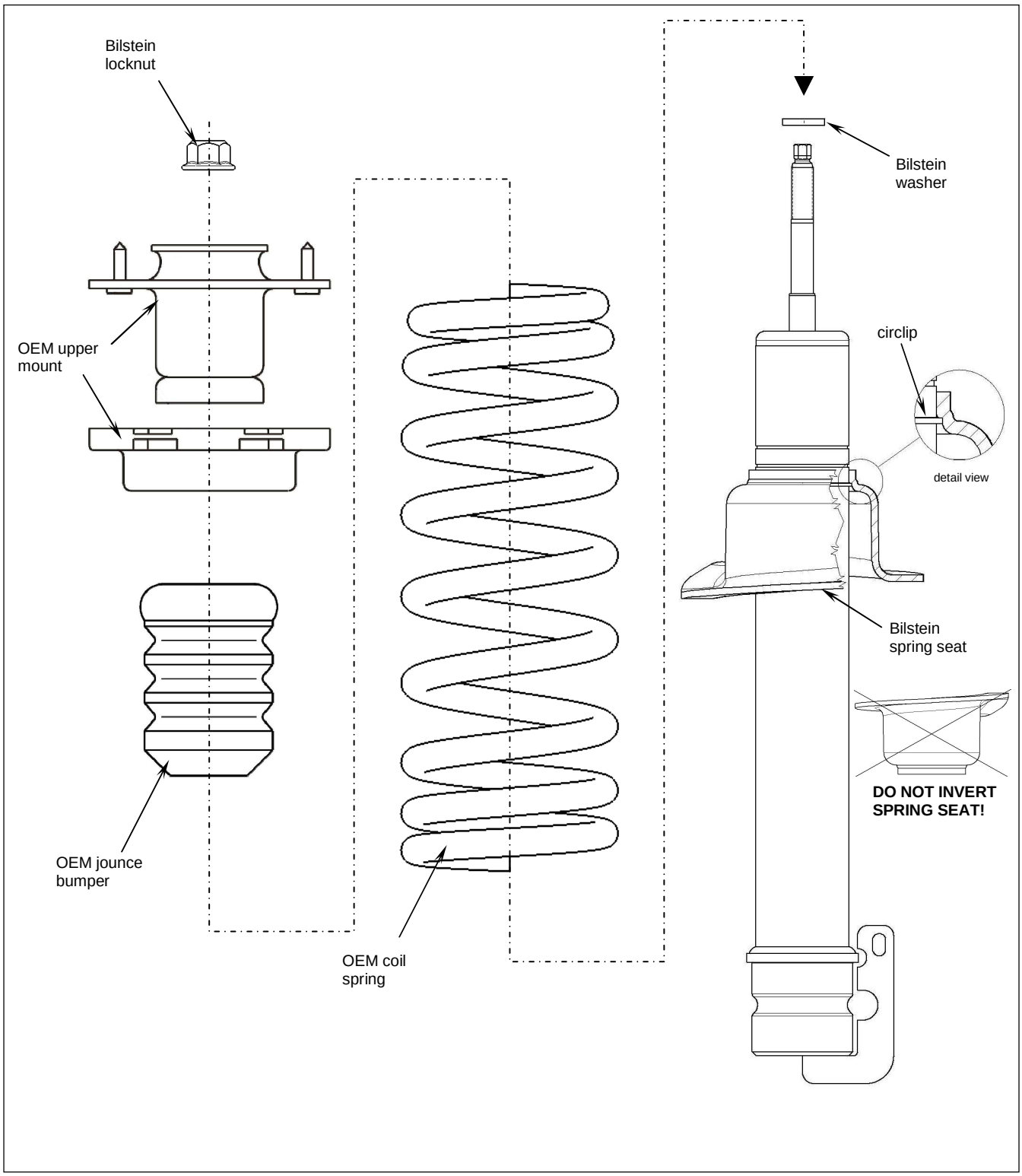
Figure 2: Installation order of shock absorber assembly components