E-WM05-0000018
MOUNTING INSTRUCTION

IMPORTANT! READ THIS FIRST!

Installation of shock absorbers or other suspension components requires special tools and expert knowledge. Accordingly, installation of all BILSTEIN products must be performed by a professional automotive suspension technician.

When replacing other brands, BILSTEIN shock absorbers or other suspension components should always be installed as a set. All BILSTEIN products must only be used for the specific, intended application as indicated in the application guide. **Any use of any BILSTEIN product other than for its intended use may result in serious bodily injury or death.**

Always use a chassis hoist for the installation of BILSTEIN products and make certain that the raised vehicle is securely attached to the hoist and/or supported to prevent the vehicle from slipping, falling, or moving during the installation process.

If you install any BILSTEIN product without the necessary special tools, expertise, and chassis hoist, you may subject yourself to the risk of serious bodily injury or death.

BILSTEIN shock absorbers are gas-filled and are highly pressurized.

- Never place any BILSTEIN shock absorbers in a vise or use a clamp on any BILSTEIN shock absorber.
- Never apply heat near any BILSTEIN shock absorber.
- Never attempt to open or repair any BILSTEIN product, in order to prevent **serious bodily injury or death.**

Any attempt to misuse, misapply, modify, or tamper with any BILSTEIN suspension product voids any warranty and **may result in serious bodily injury or death.**

While installing any BILSTEIN product:

- Do not use impact tools for loosening or tightening fasteners, because this may destroy the screw threads.
- Self-locking fasteners must only be used **once**!
- Reuse original equipment components only if they are in good condition, otherwise replace them with new components.
- Never remove the slight film of oil on the shock absorber piston rod and seal.
- All mounting fasteners for shock absorbers and other suspension components must be securely tightened before tension is placed on the suspension system, unless otherwise specified in the manufacturer's service manual or in this instruction.

After installing any BILSTEIN product:

- The suspension caster and camber must be checked and/or adjusted to comply with the vehicle manufacturer's specifications.
- The (load dependent) brake compensator and the anti-lock brake system must be checked and/or reset to comply with the vehicle manufacturer's specifications.
- The headlight aim must be checked and adjusted.

CAUTION for COILOVER TYPE SUSPENSIONS!!!
If disassembling a coilover type suspension, refer to the vehicle manufacturer's service manual for proper procedures. The coil spring is preloaded and must be compressed with a spring compressor to release load before the upper mount is disassembled. Failure to follow the vehicle manufacturer's procedures may cause serious injury or death, and may damage the vehicle.

IMPORTANT!!!
This BILSTEIN product may or may not be compatible with non-BILSTEIN aftermarket products and/or vehicle modifications. It is the responsibility of the professional automotive suspension technician performing the installation to identify any non-OEM components and/or modifications on the vehicle that may interact with the suspension system. These must be evaluated for any potential physical static or dynamic interference with and/or effect on the function of this BILSTEIN product.

E-WM05-0000018
MOUNTING INSTRUCTION

BILSTEIN 5160 Series Reservoir Shock Absorbers are designed to fit your vehicle's original shock mounts with minor modifications. Modification for this product includes a lower mount relocation bracket and a reservoir mount.

Installation Procedure:

A. Remove the existing front shocks from the vehicle following all procedures in the vehicle manufacturer's service manual.

B. A mount kit is included to allow the remote reservoir to be attached to the vehicle frame rail behind the front bumper. This kit is depicted in Figure 1.

Item	Description	Qty.
1	RESERVOIR CLAMP	1
2	M8 x 1.25 x 18mm COUNTERSUNK SCREW	2
3	M6 x 1 x 50mm SOCKET HEAD CAP SCREW	1
4	M6 x 1 LOCK NUT	1
5	RESERVOIR MOUNT PLATE	1
6	1/4"-20 x 1" HEX SCREW	1
7	5/16"-18 x 1" HEX SCREW	1
8	5/16"-18 x 1.25" HEX SCREW	1
9	5/16" WASHER	1
10	3/8"-24 SERRATED FLANGE NUT	1
11	1/4"-20 x 1.25" CAP SCREW	1
12	1/4" WASHER	1
13	5/16"-18 SERRATED FLANGE NUT	1
14	1/4"-20 THREADED INSERT	1
15	5/16"-18 HEX THREADED INSERT	1
16	ZIP TIE	1
17	OFFEST ZIP TIE	1
18	RUBBER STRIP	1

Figure 1

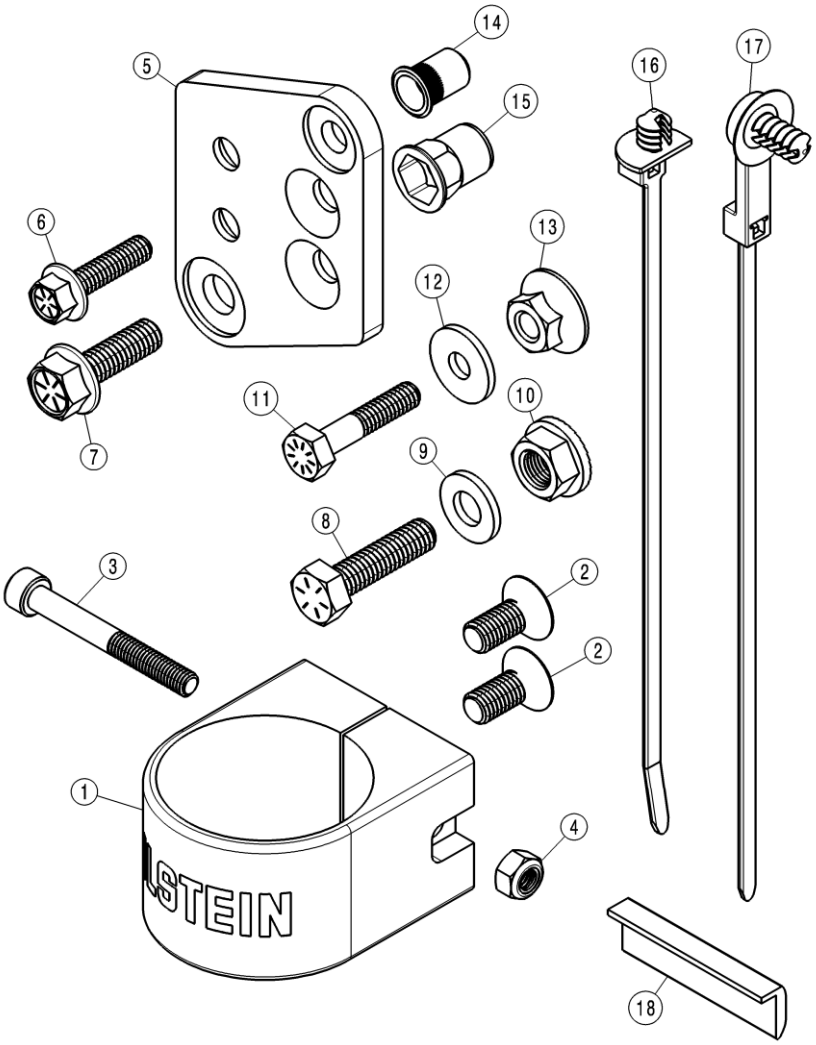

C. If you have access to a nutsert gun or pliers, that may be preferable to set the provided nutsert. Otherwise, using the items in Figure 2, and a ½" box end wrench, arrange them as shown and turn the ¼"-20 screw by hand until it is snug as shown in Figure 3.

Note that the screw will pass through the serrated flange nut without engaging the threads. The serrations on the flange nut prevent the nutsert from rotating while setting it.

Figure 2

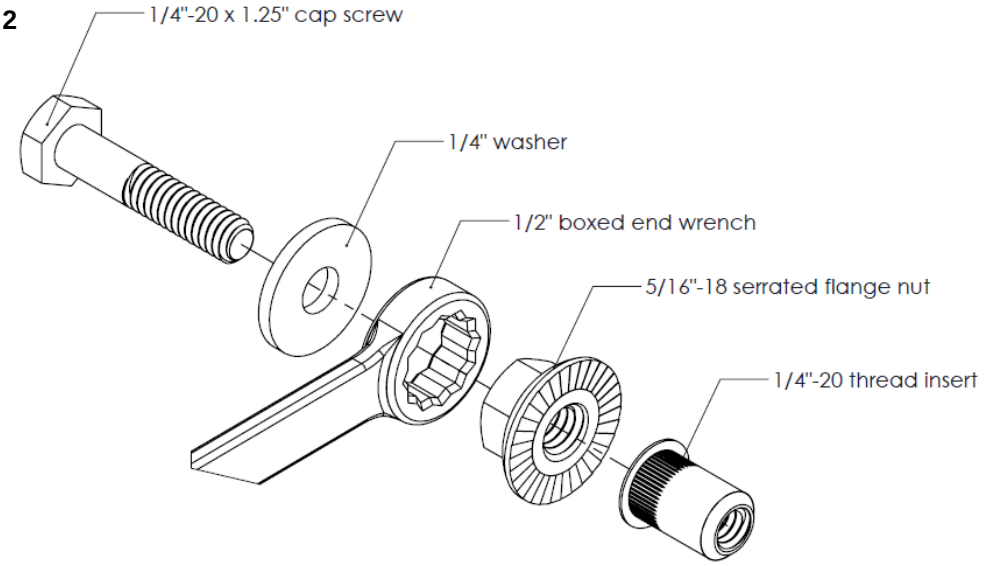

Figure 3

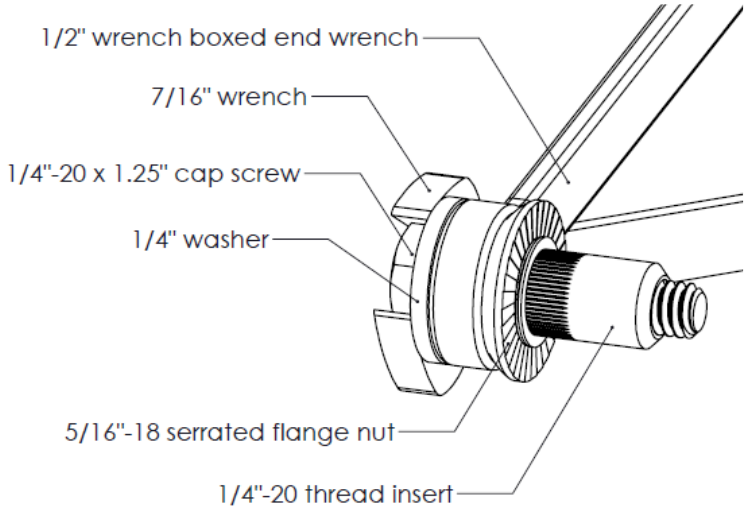

D. For the driver side, insert the nutsert into the hole shown in Figure 4. For the passenger side, insert the nutsert into the hole shown in Figure 5.

Figure 4 – Driver side

1/4”-20
THREADED
INSERT

5/16”-18
HEX
INSERT

Figure 5 – Passenger side

E. While keeping the nutsert flange firm and parallel against the bumper support, tighten the screw using a 7/16” box end wrench or socket. Turn it 2 rotations to set the nutsert. Tightening in ¼ turn increments tends to work well.

F. Remove and discard the screw, washer and flange nut. The nutsert should now be rigidly fixed in the hole.

G. Assemble the 5/16”-18 hex screw, 5/16” flat washer, a 9/16” boxed end wrench, the 3/8” serrated flange nut and hex threaded insert the same way as in Figure 2.

H. For driver side, insert the nutsert into the hole shown in Figure 4. For the passenger side, insert the nutsert into the hole shown in Figure 5.

I. While keeping the nutsert flange firm and parallel against the bumper support, tighten the screw using a 1/2” box end wrench or socket. Turn it 2 rotations to set the nutsert. Tightening in ¼ turn increments tends to work well.

J. Remove the screw and washer. Discard the washer and serrated flange nut. The nutsert should now be rigidly fixed in the hole.

K. Assemble the reservoir bracket onto the mounting plate using the M8x1.25 countersunk screws as shown in Figure 6. Torque the M8x1.25 countersunk screws to 10 lb•ft (13.6 N•m). Do not torque the M6x1 cap screw at this time.

Figure 6

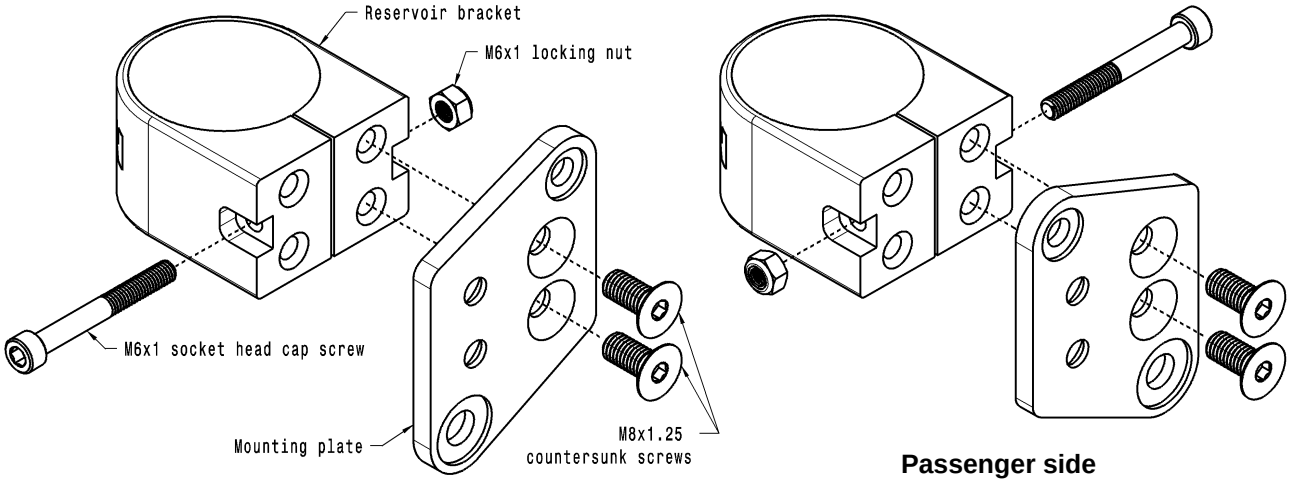

Driver side

L. Install the plate and bracket assembly with the ¼”-20 x 1” screw in the upper nutsert. Rotate the assembly and slide the reservoir into the bracket as shown in Figure 7. Rotate the bracket assembly back up and install the 5/16”-18 x 1” screw in the bottom nutsert. Using a nonpermanent thread locker is recommended.

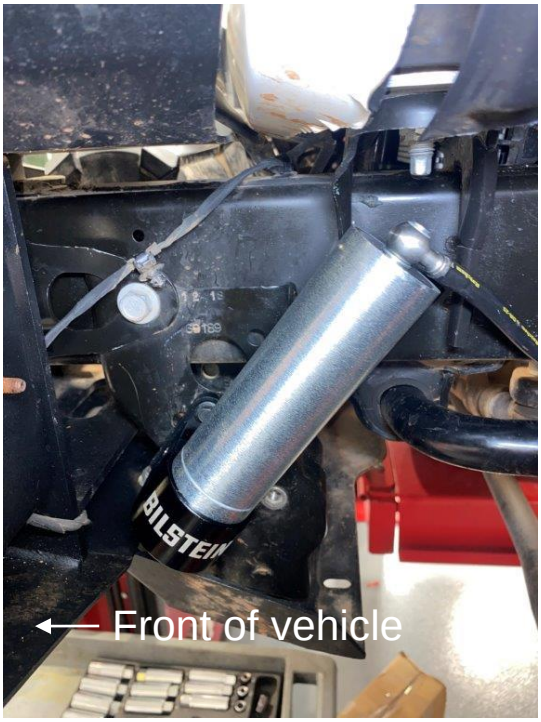

Figure 7 – Driver side

Figure 8 – Driver side

M. Torque the two screws to 10 lb•ft (13.6 N•m).

N. Slide the reservoir down approximately where shown and torque the M6x1 socket head cap screw to 6 lb•ft (8 N•m).

O. A mount kit is included to allow the lower shock mount to be offset away from the frame. This kit is depicted in Figure 9.

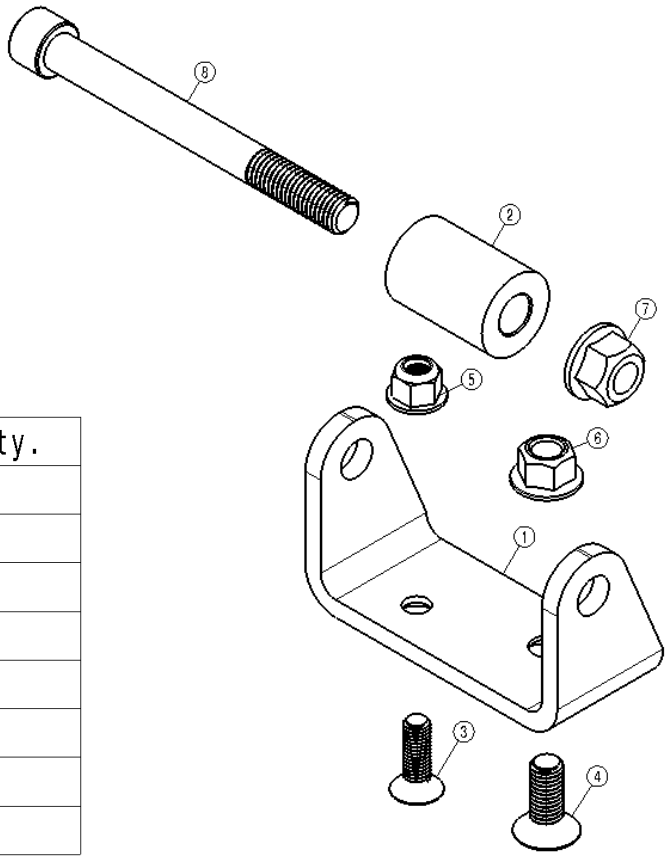

Item	Description	Qty.
1	clevis	1
2	Spacer, 12.8 ID, L = 40	1
3	Screw, M8x1.25, L = 25	1
4	Screw, M10x1.5, L = 25	1
5	Nut M8 x 1.25	1
6	Nut M10 x 1.5	1
7	Nut M12 x 1.75	1
8	M12x1.75, L=120, Class 12.9	1

Figure 9 – Lower mount offset bracket

P. Install the driver side shock in the original location with the top mount offsetting away from the vehicle as shown in Figure 10.

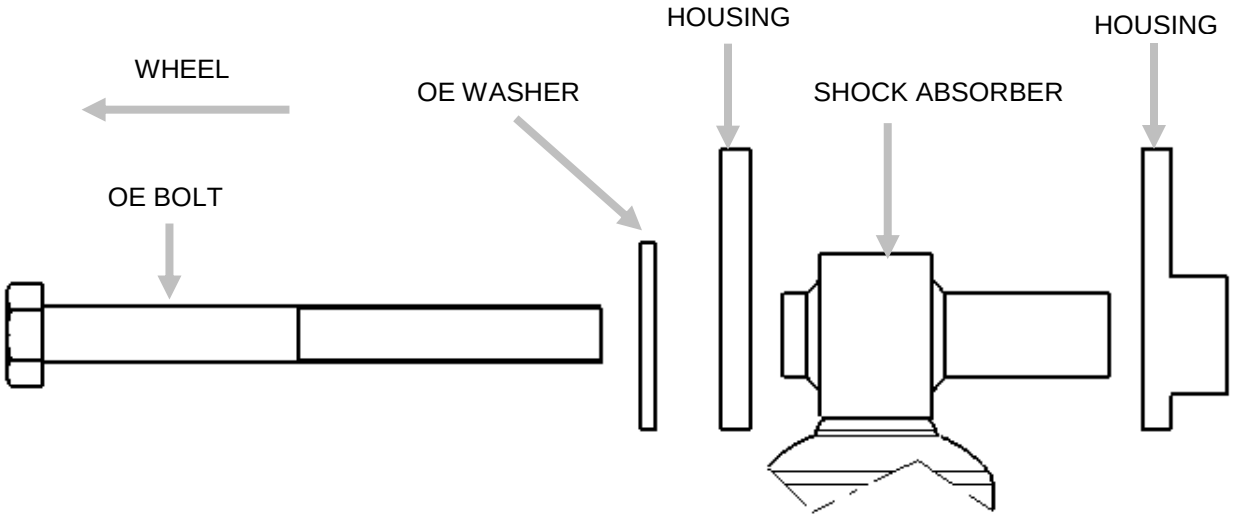

Figure 10 – Driver side top

Q. Install the clevis from the mount kit in figure 9 using the M10 screw and nut. The position of the clevis should allow the offset be towards the wheel. Torque down the fasteners to 31 lb•ft (42 N•m)

R. Place the spacer in between the flanges of the OE mount. Then position the shock's lower mount outside of the OE's mount as shown in figure 11. Secure it with the M12 bolt and nut.

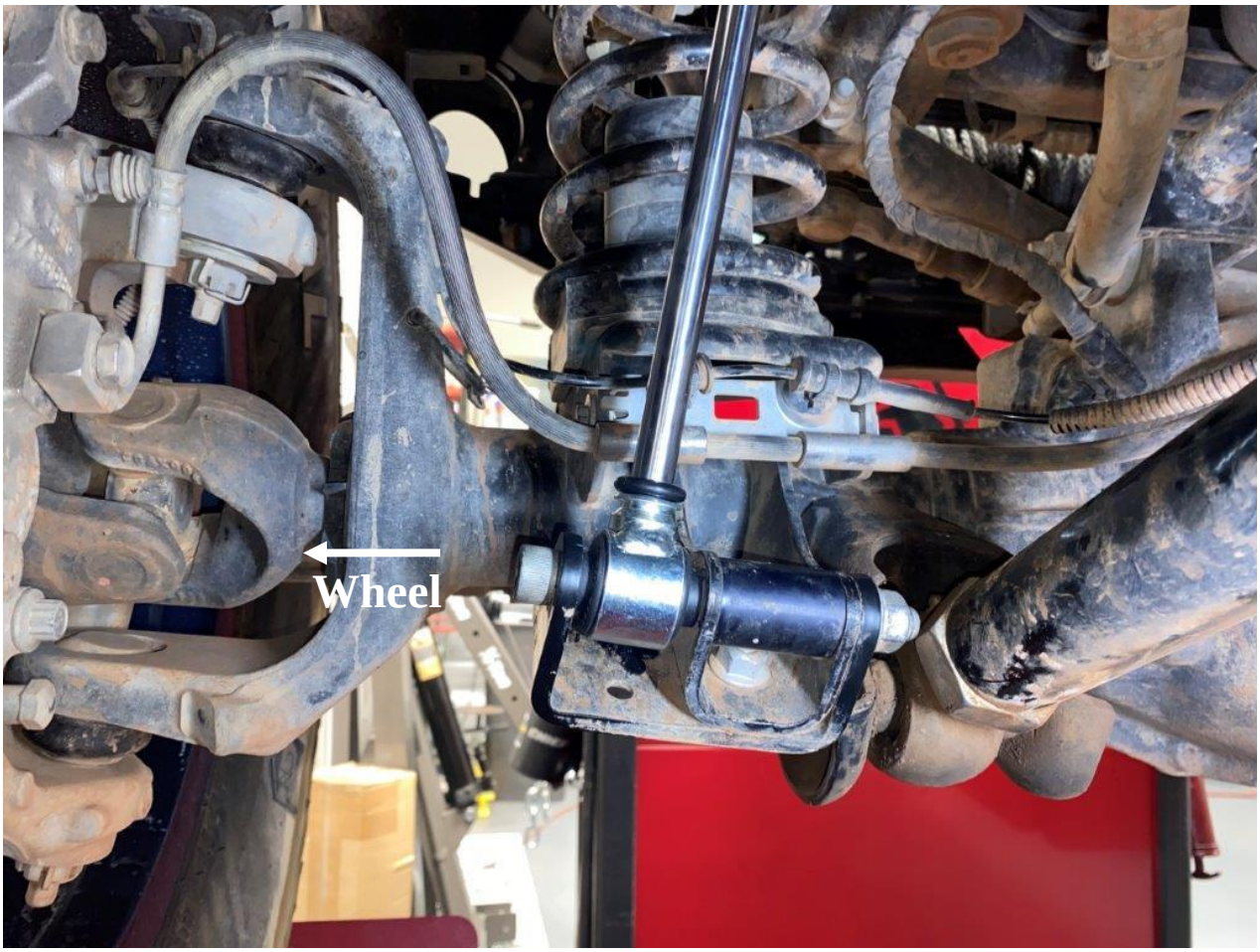

Figure 11 – Driver side bottom mount

S. Torque the top and bottom mounting fasteners to factory specification.

T. Proceed onto the passenger side

U. Install the passenger side shock in the original location with the top mount offsetting away from the vehicle as shown in Figure 12.

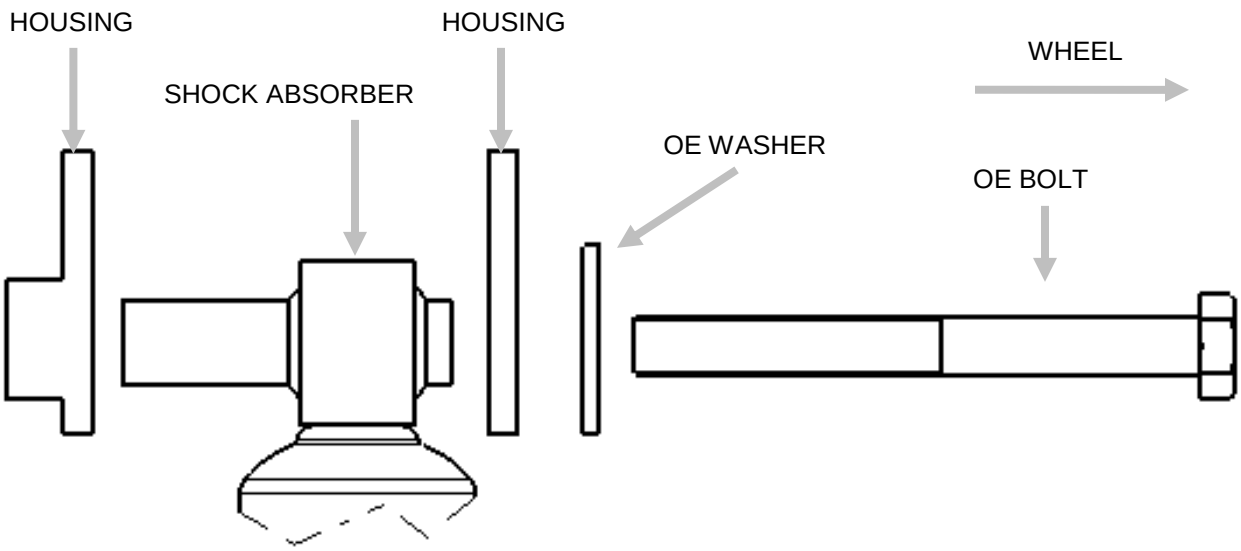

Figure 12 – Passenger side top mount

V. Install the clevis from the mount kit in figure 9 using the M8 screw and nut. The position of the clevis should allow the offset be towards the wheel. Torque down fastener to 19 lb•ft (25 N•m).

W. Place the spacer in between the flanges of the OE mount. Then position the shock's lower mount outside of the OE's mount as shown in figure 13. Secure it with the M12 bolt and nut.

Figure 13 – Passenger side bottom mount

X. Torque the top and bottom mounting fasteners to factory specification.

Y. For the Driver side, route the hose as shown in Figure 14. Use the offset zip tie in the hole shown and route the hose behind the fender lining and brake line. Apply the rubber strip where shown.

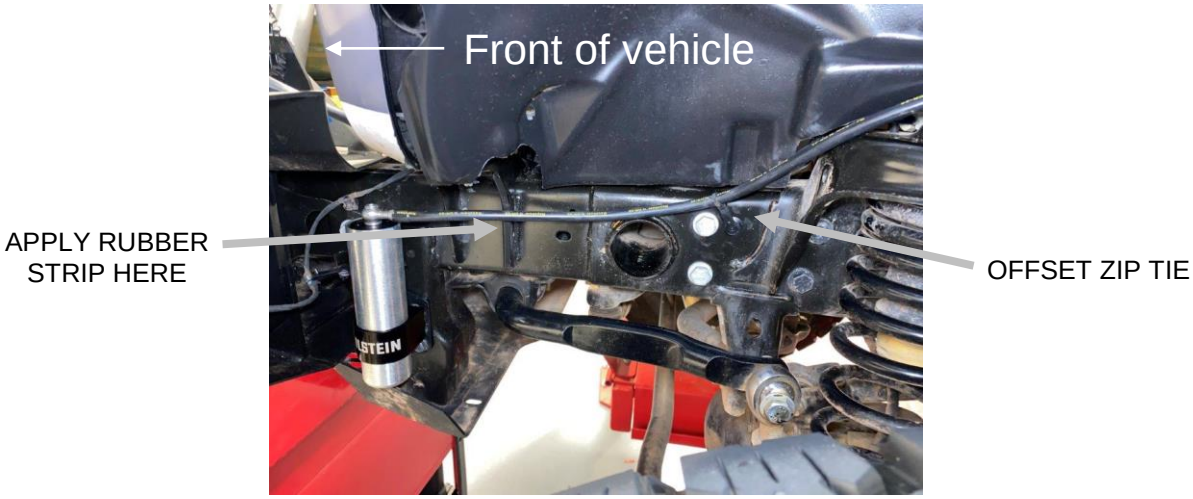

Figure 14 – Driver side

Z. For the Passenger side, route the hose as shown in Figures 15 and 16. Carefully remove the zip ties holding the electrical cable shown. Route the hose behind these cables. If the factory zips tie are in good condition, reuse them. If not, replace them with the supplied zip ties. Apply the rubber strip where shown.

Figure 15 – Passenger side

Figure 16 – Passenger side

AA. Carefully check for any possible interference between the reservoirs/hoses and any other components on the vehicle. The reservoir mounting location depicted is appropriate for most vehicles for which this kit is intended, however, some wheel/tire and/or lift kit combinations and/or other vehicle modifications may create interference problems. It is the responsibility of the installer to determine if the reservoirs are mounted appropriately and if there is any potential for interference.

BB. If no potential interference is found, the installation is complete.