UCA W/NON-ANGLED BORE INSTALL	ICON UNIBALL TOOL KIT (614518) CAN NOT BE USED FOR INSTALL OF DELTA JOINT, ONLY REMOVAL OF UNIBALL!	ICON BILLET UCA W/ANGLED BORE INSTALL
DELTA JOINT INSTALL KIT (614519) REQUIRED		DELTA JOINT INSTALL KIT (614520) REQUIRED

TOOLS REQUIRED:

- ICON UNIBALL TOOL KIT OR HYDRAULIC PRESS
- HOOK PICK OR RETAINING RING REMOVER
- 5/16" WRENCH
- 8" C FRAME BALL JOINT PRESS
- ICON DELTA JOINT PRESS TUBE *(AVAILABLE IN PART #614519, 614520)*

DELTA JOINT™

TECH NOTES:

- TAPERED SHIM REQUIRED FOR INSTALL INTO ICON BILLET UCA WITH ANGLED BORE.
- TAPERED SHIM IS AVAILABLE IN ICON UNIBALL TOOL KIT *(PART #614518)* AND DELTA JOINT INSTALL KIT *(PART #614520)*

1

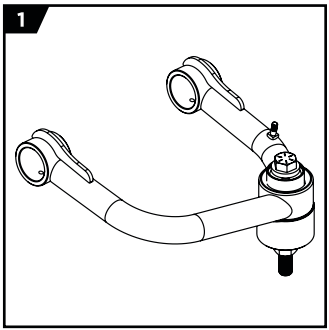

STEP 1: Remove retaining ring and press uniball out of UCA. If using ICON Uniball Replacement Tool Kit see Part #614518 instructions.

2

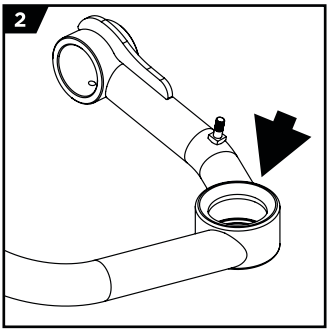

STEP 2: Clean UCA bore & retaining ring groove. Once clean, liberally apply antiseize to bore.

3

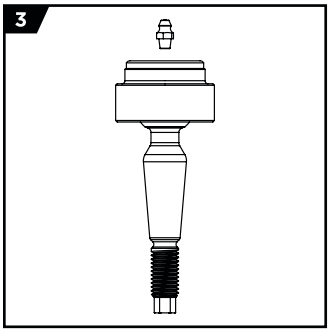

STEP 3: Remove grease fitting from Delta Joint. Failure to remove may lead to terminal damage if press used doesn't allow clearance for zerk to pass through.

4

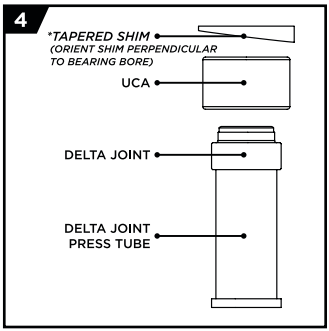

STEP 4: Arrange Delta Joint, UCA, and adapter tube as shown. If installing in an ICON billet UCA that has an angled bore, the tapered shim *(*shown in diagram)* is required. This shim is available in ICON Part #614520 and #614518.

5

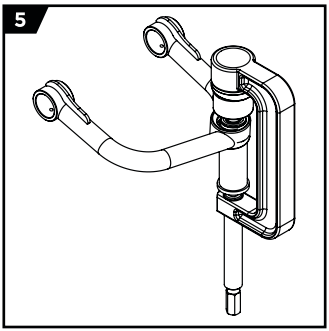

STEP 5: Screw in C frame screw until Delta Joint is seated. Failure to use tapered shim on ICON UCA with angled bore will destroy the bearing bore.

6

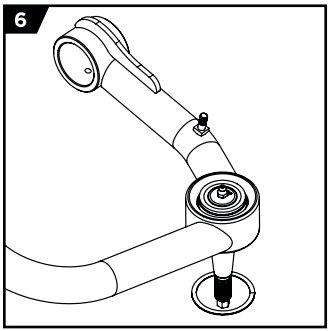

STEP 6: Install retaining ring & reinstall grease fitting. Take care not to overtighten zerk.

MAINTENANCE: GREASE DELTA JOINTS EVERY 3,000 MILES UNTIL CLEAN GREASE COMES OUT

QUESTIONS, CONCERNS? CALL ICON AT 951-689-4266 OR VISIT WWW.ICONVEHICLEDYNAMICS.COM/DELTAJOINT